DW733 Main unit PLANER THICKNESSER 2

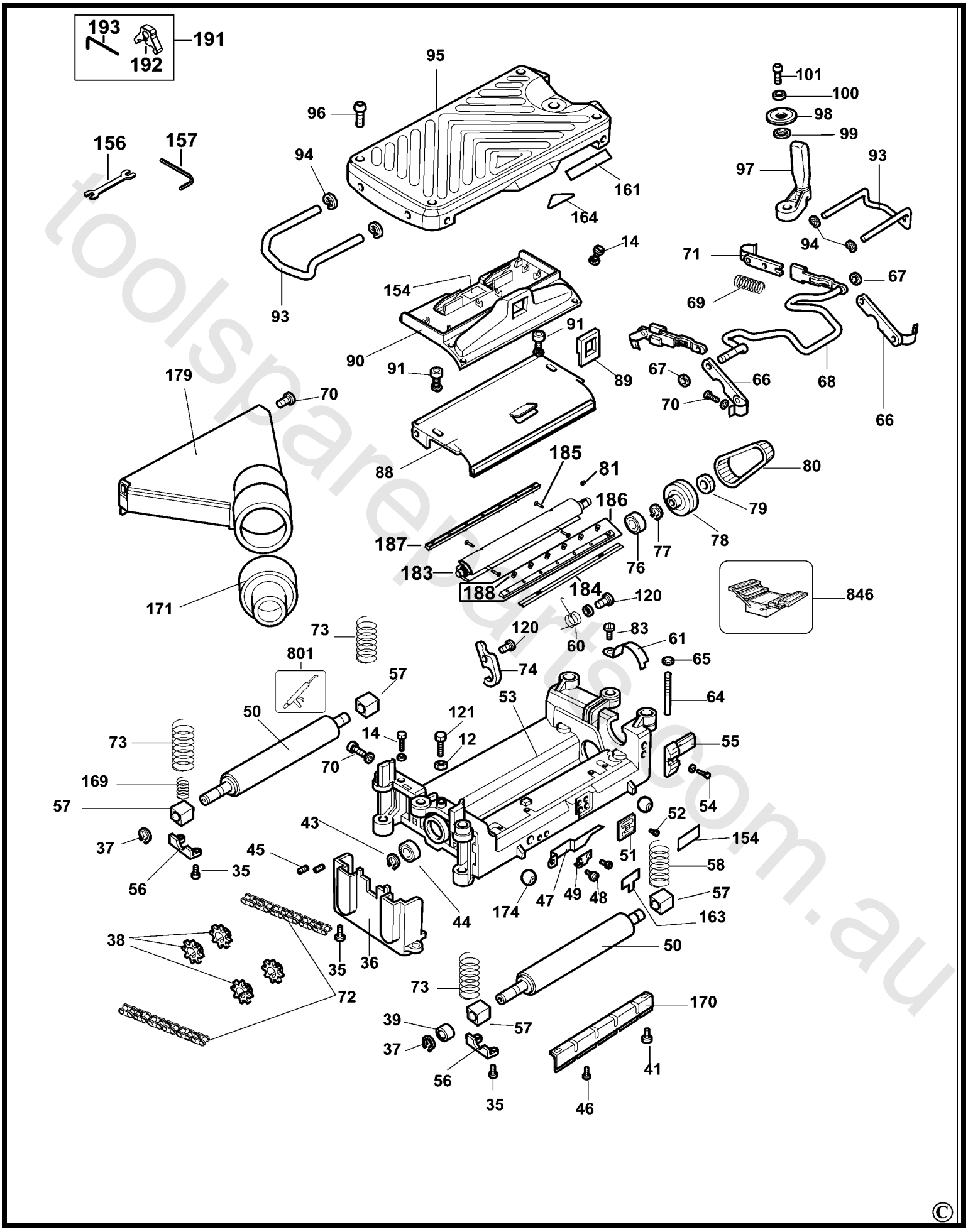

©